Owner's Manual

Operation & Care

INSTALLER: Leave this manual with party responsible for use and operation.
OWNER: Retain this manual for future reference.

Contact your dealer with question on installation, operation, or service.

NOTICE: DO NOT DISCARD THIS MANUAL

QUADRA-FIRE®

3100 MILLENNIUM WOOD APPLIANCE AUTOMATIC COMBUSTION CONTROL (ACC)

MODEL NUMBER: 31M-ACC-C

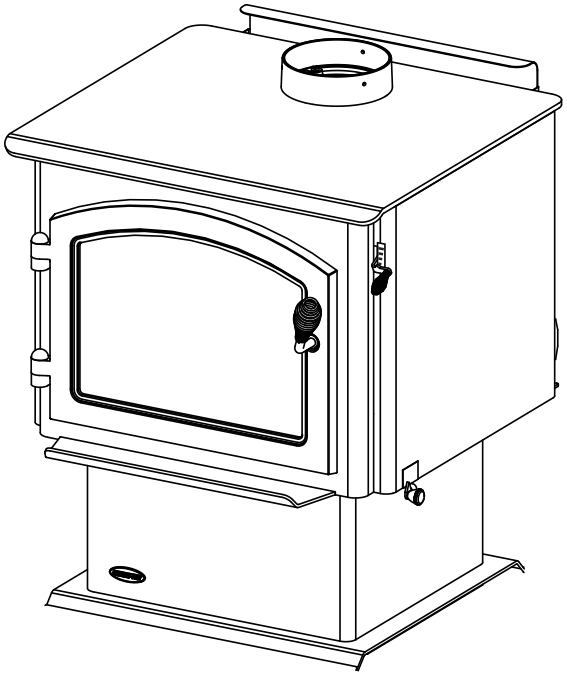

EM O-TL C US

Installation and service of this appliance should be performed by qualified personnel. Hearth & Home Technologies recommends HHT Factory Trained or NFI certified professionals.

hearthED FACTORY TRAINING

NFI NATIONAL FIREPLACE INSTITUTE A CERTIFICATION AGENCY

WARNING

If the information in these instructions is not followed exactly, a fire could result causing property damage, personal injury, or death.

- Do not store or use gasoline or other flammable vapors and liquids in the vicinity of this or any other appliance.
- Do not over-fire - If appliance or chimney connector glows, you are over-firing. Over-firing will void your warranty.
- Comply with all minimum clearances to combustibles as specified.

Failure to comply may cause house fire.

WARNING

HOT SURFACES!
Glass and other surfaces are hot during operation AND cool down.

Hot glass and appliance will cause burns.

- Do not touch glass until it is cooled
- Use leather gloves when reloading fuel
- NEVER allow children to touch glass
- Keep children away
- CAREFULLY SUPERVISE children in same room as appliance.
- Alert children and adults to hazards of high temperatures
- **High temperatures may ignite clothing or other flammable materials.**
- Keep clothing, furniture, draperies and other flammable materials away.

WARNING

Fire Risk.
For use with solid wood fuel only.
Other fuels may over-fire and generate poisonous gases (i.e. carbon monoxide).

NOTE: To obtain a French translation of this manual, please contact your dealer or visit www.quadrafire.com

REMARQUE : Pour obtenir une traduction française de ce manuel, s'il vous plaît contacter votre revendeur ou visitez www.quadrafire.com

Congratulations

and Welcome to the Quadra-Fire Family!

NOTE: Clearances may only be reduced by means approved by the regulatory authority having jurisdiction

A. Sample of Serial Number / Safety Label

LOCATION: Back of appliance

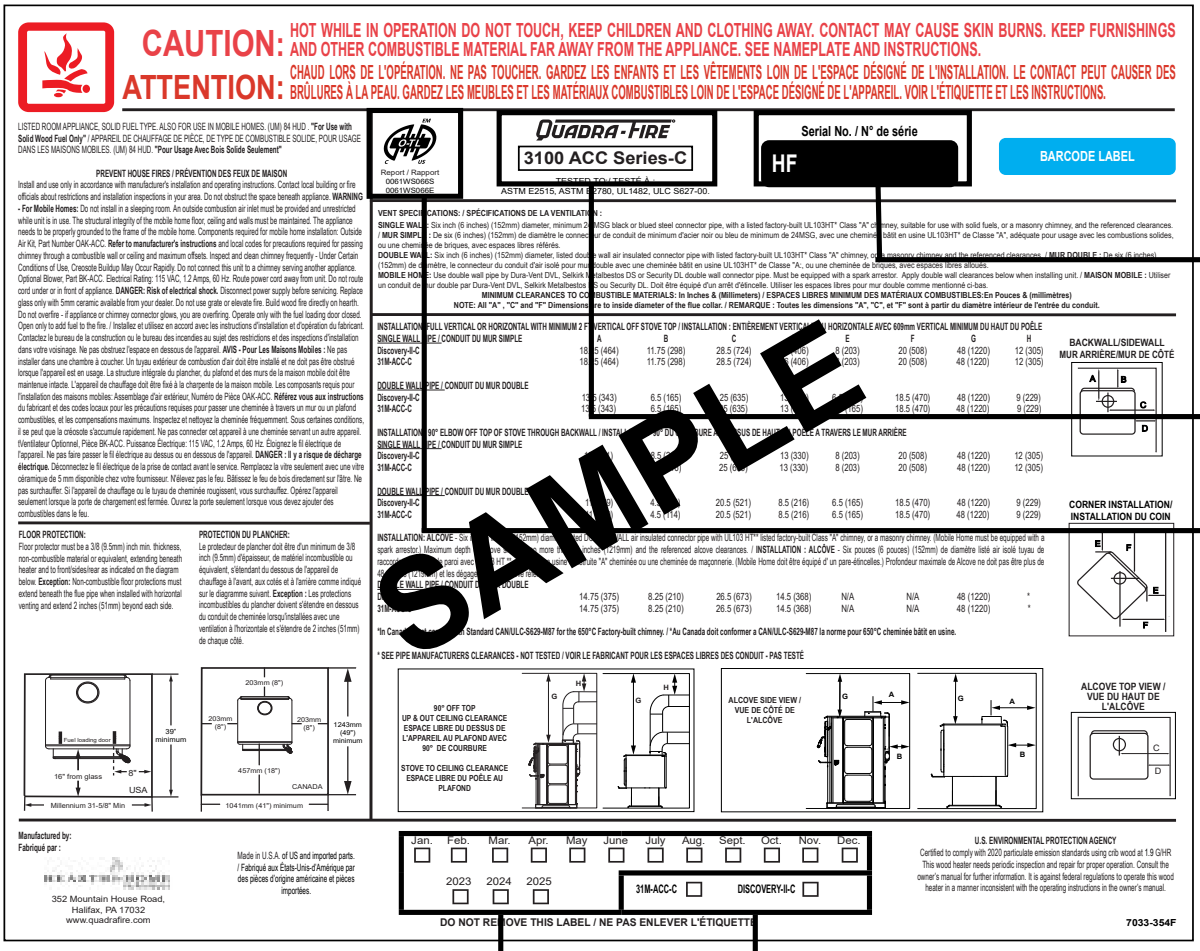

Safety Alert Key:

- **DANGER!** Indicates a hazardous situation which, if not avoided will result in death or serious injury.
- **WARNING!** Indicates a hazardous situation which, if not avoided could result in death or serious injury.
- **CAUTION!** Indicates a hazardous situation which, if not avoided, could result in minor or moderate injury.
- **NOTICE:** Indicates practices which may cause damage to the appliance or to property.

TABLE OF CONTENTS

A. Sample of Serial Number / Safety Label 2
B. Warranty Policy 4
C. Quick Start Guide. 6

1 Listing and Code Approvals

A. Appliance Safety Certification 7
B. Appliance Emissions Certification 7
C. BTU & Efficiency Specifications. 7
D. Glass Specifications. 8
E. Mobile Home Approved 8
F. Sleeping Room 8
G. California - Prop65. 8

2 Operating Instructions

A. Over-Firing Your Appliance 9
B. Wood Selection & Storage. 9
C. Burning Process. 9
➔ D. Burn Rates and Operating Efficiency. 10
E. Building A Fire 12
F. Blower Operating Instructions. 13
G. Opacity (Smoke) 14
H. Clear Space 14
I. Negative Pressure. 15
J. Frequently Asked Questions. 15

3 Maintenance and Service

A. Quick Reference Maintenance Guide 16
B. General Maintenance. 17
C. Correct Baffle & Blanket Placement. 19

4 Troubleshooting Guide 20

5 Service Part Replacement

A. Glass 21
B. Firebrick 21
C. Snap Disc. 22
D. Door Handle Assembly 22
E. Baffle Removal. 23
F. Tube Channel Assembly. 24

6 Reference Materials

A. Service and Maintenance Log 25
B. Service Parts 29

➔ = Contains updated information

Quadra-Fire is a registered trademark of Hearth & Home Technologies.

B. Warranty Policy

Hearth & Home Technologies LLC

LIMITED LIFETIME WARRANTY

Hearth & Home Technologies LLC ("HHT") extends the following warranty for HHT gas, wood, pellet and electric hearth appliances (each a "Product" and collectively, the "Product(s)") and certain component parts set forth in the table below ("Component Part(s)") that are purchased from a HHT authorized dealer or distributor.

WARRANTY COVERAGE:

HHT warrants that the Products and their Component Parts will be free from defects in materials and workmanship for the applicable period of Warranty coverage set forth in the table below ("Warranty Period"). If a Product or Component Parts are found to be defective in materials or workmanship during the applicable Warranty Period, HHT will, at its option, repair the applicable Component Part(s), replace the applicable Component Part(s), or refund the purchase price of the applicable Product(s). The maximum amount recoverable under this Warranty is limited to the purchase price of the Product. This Warranty is transferable from the original purchaser to subsequent owners, but the Warranty Period will not be extended in duration or expanded in coverage for any such transfer. This Warranty is subject to conditions, exclusions, and limitations as described below.

WARRANTY PERIOD:

Warranty coverage begins at the date of installation. In the case of new home constructions, Warranty coverage begins on the date of first occupancy of the dwelling or six months after the sale of the Product(s) by an independent, authorized HHT dealer or distributor, whichever occurs earlier. However, the Warranty coverage shall commence no later than 24 months following the date of Product shipment from HHT, regardless of the installation or occupancy date.

The term "Lifetime" in the table below is defined as: 20 years from the beginning date of warranty coverage for gas appliances, and 10 years from the beginning date of warranty coverage for wood and pellet appliances. These time periods reflect the minimum expected useful lives of the designated Component Parts under normal operating conditions.

Warranty Period		HHT Manufactured Appliances and Venting					
Component Parts	Labor	Gas	Pellet	Wood	Electric	Venting	Component Parts Covered by this Warranty
1 Year		X	X	X		X	All parts including handles, external enameled components and other material except as covered by Warranty Conditions, Warranty Exclusions, and Warranty Limitations listed
2 Years					X		All parts except as covered by Warranty Conditions, Warranty Exclusions, and Warranty Limitations listed
2 years			X	X			Igniters, Auger Motors, Electronic Components, and Glass
		X					Electrical components limited to modules, remotes/wall switches, valves, pilots, blowers, junction boxes, wire harnesses, transformers and lights (excluding light bulbs)
		X		X			Molded Refractory Panels, Glass Liners
3 years			X				Firepots, burnpots, mechanical feeders/auger assemblies
5 years	1 year	X					Vent Free Burners, Vent Free Logs
			X	X			Castings, Medallions and Baffles
6 years	3 years			X			Catalysts
7 years	3 years		X	X			Manifold tubes, HHT Chimney and Terminations
10 years	1 year	X					Burners, logs and refractory
Limited Lifetime	3 years	X	X	X			Firebox and heat exchanger, FlexBurn® System (engine, inner cover, access cover and fireback)
1 Year	None	X	X	X	X	X	All purchased replacement parts

WARRANTY CONDITIONS:

- Because HHT cannot control the quality of any Products sold by unauthorized sellers, this Warranty only covers Products that are purchased through an HHT authorized dealer or distributor unless otherwise prohibited by law; a list of HHT authorized dealers is available on the HHT branded websites.
- This Warranty is only valid while the applicable Product remains at the site of original installation.
- This Warranty is only valid in the country in which the HHT authorized dealer or distributor that sold the applicable Product is authorized to sell applicable Product.
- Contact your installing distributor or dealer for Warranty service. If the installing dealer or distributor is unable to provide necessary parts, contact the nearest HHT authorized dealer or supplier. Additional service fees may apply if you are seeking Warranty service from a dealer other than the dealer from whom you originally purchased the applicable Product.
- No HHT consumer should bear cost of warranty service or costs incurred while servicing warranty claims (i.e., travel, gas, or mileage) when the service is performed within the terms of this Warranty. Check with your dealer or distributor in advance for any costs to you when arranging a warranty call. Travel and shipping charges for parts are not covered by this Warranty.

WARRANTY EXCLUSIONS:

This Warranty does not cover the following:

- Changes in surface finishes as a result of normal use. As a heating appliance, some changes in color of interior and exterior surface finishes may occur. This is not a flaw and is not covered under the Warranty.
- Damage to printed, plated, or enameled surfaces caused by fingerprints, accidents, misuse, scratches, melted items or other external sources and residues left on the plated surfaces from the use of abrasive cleaners or polishes.
- Repair or replacement of parts that are subject to normal wear and tear during the Warranty Period are not covered. These parts include: paint, wood and pellet gaskets, firebricks, grates, flame guides, batteries and the discoloration of glass.
- Minor expansion, contraction, or movement of certain parts causing noise. These conditions are normal and complaints related to this noise are not covered by this Warranty.
- Damages resulting from: (1) failure to install, operate, or maintain the applicable Product in accordance with the installation instructions, operating instructions, and listing agent identification label furnished with the applicable Product; (2) failure to install the applicable Product in accordance with local building codes; (3) shipping or improper handling; (4) improper operation, abuse, misuse, continued operation with damaged, corroded or failed components, accident, or improperly/incorrectly performed repairs; (5) environmental conditions, inadequate ventilation, negative pressure, or drafting caused by tightly sealed constructions, insufficient make-up air supply, or handling devices such as exhaust fans or forced air furnaces or other such causes; (6) use of fuels other than those specified in the operation instructions; (7) installation or use of components not supplied with the applicable Product or any other components not expressly authorized and approved by HHT; (8) modification of the appliance not expressly authorized and approved by HHT in writing; and/or (9) interruptions or fluctuations of electrical power supply to the applicable Product.
- Non-HHT venting components, hearth connections or other accessories used in conjunction with the applicable Product.
- Any part of a pre-existing fireplace system in which an insert or a decorative gas applicable Product is installed.
- HHT's obligation under this Warranty does not extend to the Product's capability to heat the desired space. Information is provided to assist the consumer and the dealer in selecting the proper Product for the application. Consideration must be given to the Product location and configuration, environmental conditions, insulation and air tightness of the structure.

This warranty is void if:

- The applicable Product has been over-fired, operated in atmospheres contaminated by chlorine, fluorine, or other damaging chemicals. Over-firing can be identified by, but not limited to, warped plates or tubes, deformation/warping of interior cast iron structure or components, rust colored cast iron, bubbling, cracking and discoloration of steel or enamel finishes.
- The applicable Product is subjected to prolonged periods of dampness or condensation.
- There is any damage to the applicable Product due to water or weather damage which is the result of, but not limited to, improper chimney or venting installation.

LIMITATIONS OF REMEDIES AND LIABILITY:

- **EXCEPT TO THE EXTENT PROVIDED BY LAW, HHT MAKES NO EXPRESS WARRANTIES OTHER THAN THE WARRANTY SPECIFIED HEREIN. The owner's exclusive remedy and HHT's sole obligation under this Warranty or in contract, tort or otherwise, shall be limited to replacement of the Component Part(s), repair of the Component Part(s), or refund of the original purchase price of the applicable Product(s), as specified above; provided, however, that (i) if HHT is unable to provide replacement of the Component Part(s) and repair of the Component Part(s) is not commercially practicable or cannot be timely made, or (ii) the customer is willing to accept a refund of the purchase price of the applicable Product(s), HHT may discharge all such obligations by refunding the purchase price of the applicable Product. In no event will HHT be liable for any incidental or consequential damages caused by defects in the applicable Product. Some States do not allow the exclusion or limitation of incidental or consequential damages, so the above limitation or exclusion may not apply to you. This Warranty gives you specific legal rights and you may also have other rights which vary from State to State. THE DURATION OF ANY IMPLIED WARRANTY IS LIMITED TO DURATION OF THE EXPRESSED WARRANTY SPECIFIED ABOVE FOR THE APPLICABLE PRODUCT. Some States do not allow limitations on how long an implied warranty lasts, so the above limitation may not apply to you.**

C. Quick Start Guide

NOTE: These are generic drawings and may not represent your specific model.

ITEMS NEEDED FOR FIRST FIRE: 10 Pieces of Newspaper, 10-20 Pieces of Dry Kindling and Few Pieces of Dry Split Wood.

OPEN AIR CONTROLS

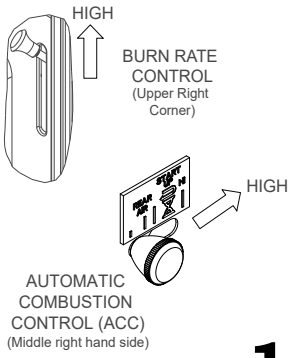

1

LOAD WOOD

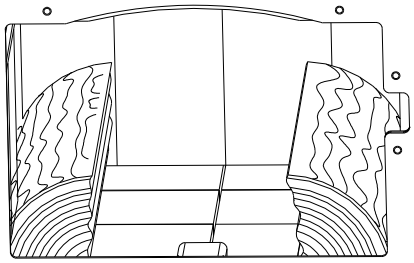

2

ADD NEWSPAPER

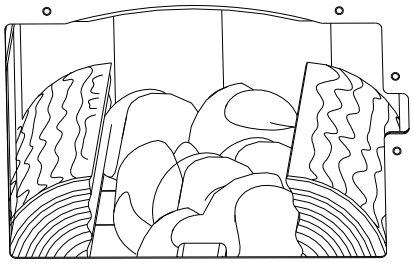

3

ADD KINDLING

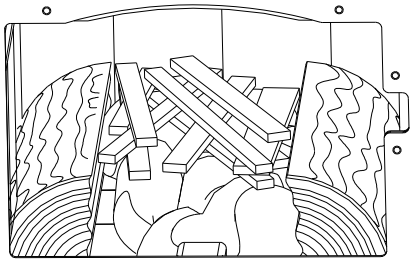

LIGHT THE PAPER

4

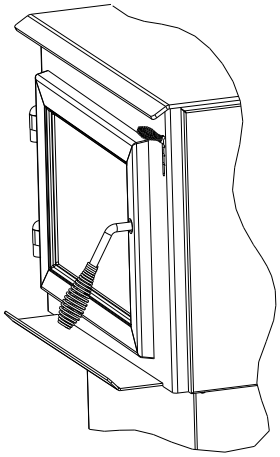

Warning! Risk of Fire.

Close and securely latch the door after the fire has started, and after refueling, to prevent:

- Spillage of smoke, flame and carbon monoxide
- Spillage of sparks, coals, and logs
- Over firing

DO NOT leave the appliance unattended with the door open.

Starting a fire may not require an open door for draft. The air control should supply adequate draft.

5

ADD MORE WOOD

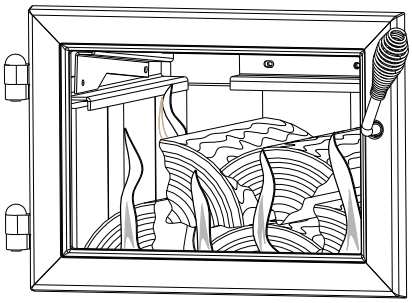

6

REDUCE AIR CONTROLS

Set to desired heat output.

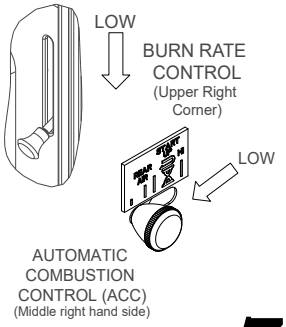

7

The appliance is ready for normal operation.

1 Listing and Code Approvals

A. Appliance Safety Certification

Model Number:	3100 Millennium Wood Appliance
Laboratory:	OMNI Test Laboratories, Inc.
Report Number:	0061WS066S
Type:	Listed Room Appliance, Solid Fuel Type
Standard:	UL1482 and ULC S627-00 and (UM) 84-HUD, Mobile Home Approved.

B. Appliance Emissions Certification

Model Number:	31M-ACC-C
Laboratory:	OMNI Test Laboratories, Inc.
Report Number:	0061WS066E
Standard:	ASTM E2515, ASTM E2780
Can be found at: www.quadrafire.com/about-us/epa-certification	

The 31M-ACC-C is Certified to comply with 2020 crib wood particulate emission standards.

This wood appliance needs periodic inspection and repair for proper operation. It is against federal regulations to operate this wood appliance in a manner inconsistent with operating instructions in this manual.

NOTE: This installation must conform with local codes. In the absence of local codes you must comply with **(UM) 84-HUD and NFPA211 in the U.S.A. and CAN/CSA-B365 Installation Codes in Canada**.

C. BTU & Efficiency Specifications

EPA Certification Number:	Number: 86-17
EPA Certified Emissions:	1.9 grams per hour
***LHV Tested Efficiency:**	78.3%
****HHV Tested Efficiency:**	72.5%
*****EPA BTU Output:**	13,900 to 29,100 / hr
******Peak BTU/Hour Output:**	51,000
Vent Size:	6 inches
Firebox Size:	1.89 cubic feet
Recommended Log Length:	16 inches
Fuel:	Seasoned Cord Wood (20% moisture)

* Weighted average LHV (Low Heating Value) efficiency using Douglas Fir dimensional lumber and data collected during EPA emission tests in accordance with the requirements of CSA B415.1. LHV assumes the moisture is already in a vapor state so there is no loss in energy to vaporize.

** Weighted average HHV (High Heating Value) efficiency using Douglas Fir dimensional lumber and data collected during EPA emission tests in accordance with the requirements of CSA B415.1. HHV includes the energy required to vaporize the water in the fuel.

*** A range of BTU outputs calculated using HHV Efficiency and the burn rates from the EPA tests, using Douglas Fir dimensional lumber.

**** A peak BTU out of the appliance calculated using the maximum first hour burn rate from the High EPA Test and BTU content of seasoned cordwood (8600) times the efficiency.

D. Glass Specifications

This appliance is equipped with 5mm ceramic glass. Replace glass only with 5mm ceramic glass. Please contact your dealer for replacement glass.

E. Mobile Home Approved

- This appliance is approved for mobile home installations when not installed in a sleeping room and when an outside combustion air inlet is provided.
- The structural integrity of the mobile home floor, ceiling, and walls must be maintained.
- The appliance must be properly grounded to the frame of the mobile home with #8 copper ground wire, and chimney must be listed to **UL103 HT or a listed UL-1777** full length six inch (152mm) diameter liner must be used.
- Outside Air Kit, part OAK-ACC must be installed in a mobile home installation.

F. Sleeping Room

When installed in a sleeping room it is recommended that a smoke and/or CO alarm be installed in the bedroom. The size of the room must be at least 50ft³ per 1,000 Btu/hr stove input, if the stove exceeds the room size, outside air must be installed.

G. California - Prop65

WARNING

This product and the fuels used to operate this product (wood), and the products of combustion of such fuels, can expose you to chemicals including carbon black, which is known to the State of California to cause cancer, and carbon monoxide, which is known to the State of California to cause birth defects or other reproductive harm. For more information go to: WWW.P65Warnings.ca.gov

WARNING

Fire Risk.
Hearth & Home Technologies disclaims any responsibility for, and the warranty will be voided by, the following actions:

- Installation and use of any damaged appliance.
- Modification of the appliance.
- Installation other than as instructed by Hearth & Home Technologies.
- Installation and/or use of any component part not approved by Hearth & Home Technologies.
- Operating appliance without fully assembling all components.
- Operating appliance without legs attached (if supplied with appliance).
- Do NOT Over fire - If appliance or chimney connector glows, you are over firing.

Any such action that may cause a fire hazard.

Improper installation, adjustment, alteration, service or maintenance can cause injury or property damage.

For assistance or additional information, consult a qualified installer, service agency or your dealer.

Hearth & Home Technologies WILL NOT warranty stoves that exhibit evidence of over-firing. Evidence of over-firing includes, but is not limited to:

- Warped air tube
- Deteriorated refractory brick retainers
- Deteriorated baffle and other interior components

NOTE: Hearth & Home Technologies, manufacturer of this appliance, reserves the right to alter its products, their specifications and/or price without notice.

2 Operating Instructions

A. Over-Firing Your Appliance

WARNING

Fire Risk. Do not over-fire.
Over-firing may ignite creosote or will damage the appliance and chimney.
To prevent over-firing your appliance, DO NOT:

- Use flammable liquids
- Overload with wood
- Burn trash or large amounts of scrap lumber
- Permit too much air to the fire

Visit www.quadrafire.com/shopping-tools/videos to view product and use & care videos.

1. **Symptoms of Over-Firing**

Symptoms of over-firing may include one or more of the following:

- Chimney connector or appliance glowing
- Roaring, rumbling noises
- Loud cracking or banging sounds
- Metal warping
- Chimney fire

2. **What To Do if Your Appliance is Over-Firing**
   - Immediately close the door and air controls to reduce air supply to the fire.
   - If you suspect a chimney fire, call the fire department and evacuate your house.
   - Contact your local chimney professional and have your appliance and appliance pipe inspected for any damage.
   - Do not use your appliance until the chimney professional informs you it is safe to do so.

Hearth & Home Technologies WILL NOT warranty appliances that exhibit evidence of over-firing. Evidence of over-firing includes, but is not limited to:

- Warped air tube
- Deteriorated refractory brick retainers
- Deteriorated baffle and other interior components

B. Wood Selection & Storage

Burn only dry seasoned wood. Store wood under cover, out of the rain and snow. Dry and well-seasoned wood will not only minimize the chance of creosote formation, but will give you the most efficient fire. Even dry wood contains at least 15% moisture by weight, and should be burned hot enough to keep the chimney hot for as long as it takes to dry the wood out - about one hour. It is a waste of energy to burn unseasoned wood of any kind.

Dead wood lying on the forest floor should be considered wet, and requires full seasoning time. Standing dead wood can be considered to be about 2/3 seasoned. To tell if wood is dry enough to burn, check the ends of the logs. If there are cracks radiating in all directions from the center, it is dry. If your wood sizzles in the fire, even though the surface is dry, it may not be fully cured.

Splitting wood before it is stored reduces drying time. Wood should be stacked so that both ends of each piece are exposed to air, since more drying occurs through the cut ends than the sides. This is true even with wood that has been split. Store wood under cover, such as in a shed, or covered with a tarp, plastic, tar paper, sheets of scrap plywood, etc., as uncovered wood can absorb water from rain or snow, delaying the seasoning process.

C. Burning Process

In recent years there has been an increasing concern about air quality. Much of the blame for poor air quality has been placed on the burning of wood for home heating. In order to improve the situation, we at Quadra-Fire have developed cleaner-burning wood appliances that surpass the requirements for emissions established by our governing agencies. These wood appliances, like any other appliances, must be properly operated in order to insure that they perform the way they are designed to perform. Improper operation can turn most any wood appliance into a smoldering environmental hazard.

1. **Kindling or First Stage:** It helps to know a little about the actual process of burning in order to understand what goes on inside a appliance. The first stage of burning is called the kindling stage. In this stage, the wood is heated to a temperature high enough to evaporate the moisture which is present in all wood. The wood will reach the boiling point of water (212°F) and will not get any hotter until the water is evaporated. This process takes heat from the coals and tends to cool the appliance.

   Fire requires three things to burn - fuel, air and heat. So, if heat is robbed from the appliance during the drying stage, the new load of wood has reduced the chances for a good clean burn. For this reason, it is always best to burn dry, seasoned firewood. When the wood isn't dry, you must open the air controls and burn at a high burn setting for a longer time to start it burning. The heat generated from the fire should be warming your home and establishing the flue draft, not evaporating the moisture out of wet, unseasoned wood, resulting in wasted heat.

2. **Second Stage:** The next stage of burning, the secondary stage, is the period when the wood gives off flammable gases which burn above the fuel with bright flames. During this stage of burning it is very important that the flames be maintained and not allowed to go out. This will ensure the cleanest possible fire. If the flames tend to go out, it is set too low for your burning conditions. The air control located at the upper right hand corner is used to adjust for burn rates. This is called the Burn Rate Air Control **(Figure 10.1)**.

3. **Final Stage:** The final stage of burning is the charcoal stage. This occurs when the flammable gases have been mostly burned and only charcoal remains. This is a naturally clean portion of the burn. The coals burn with hot blue flames.

It is very important to reload your appliance while enough lively hot coals remain in order to provide the amount of heat needed to dry and rekindle the next load of wood. It is best to open the Burn Rate Air and Start-Up Air Controls before reloading. This livens up the coal bed and reduces excessive emissions (opacity/smoke). Open door slowly so that ash or smoke does not exit appliance through opening. You should also break up any large chunks and distribute the coals so that the new wood is laid on hot coals.

Air quality is important to all of us, and if we choose to use wood to heat our homes we should do so responsibly. To do this we need to learn to burn our appliances in the cleanest way possible. Doing this will allow us to continue using our wood appliances for many years to come.

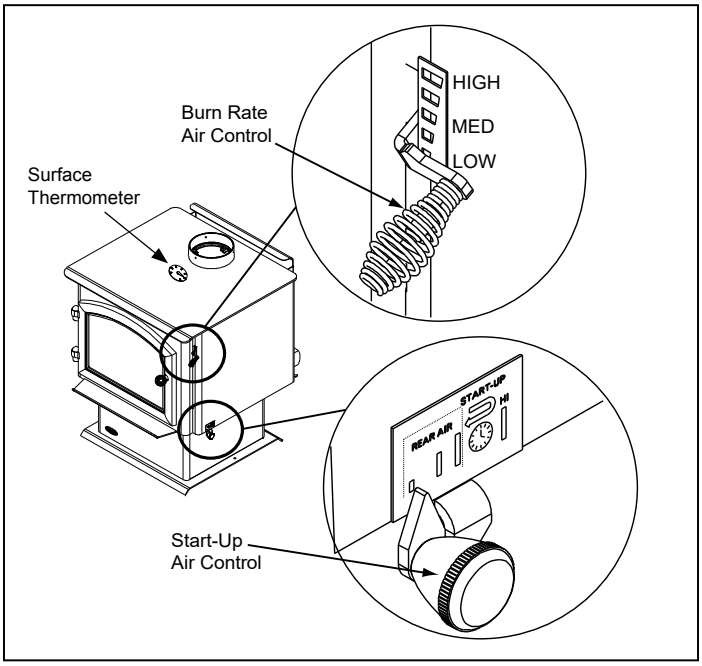

Figure 10.1

D. Burn Rates and Operating Efficiency

For maximum operating efficiency

This wood appliance has a manufacturer-set minimum low burn rate that must not be altered. It is against federal regulations to alter this setting or otherwise operate this wood appliance in a manner inconsistent with operating instructions in this manual.

- Burn dry, well-seasoned wood.

Burn Rates

1. **Low burn setting:**
   - Burn Rate Air Control spring handle up to high position for 5 minutes.
   - Then activate the ACC timer system by pushing the knob all the way back toward the appliance to “HI” then pull forwards towards the front of the appliance until the knob stops (**Figure 10.1**).
   - At that point close the Burn Rate Air Control by moving the spring handle to the low setting.
2. **Medium low burn setting:**
   - Burn Rate Air Control spring handle up to high position for 5 minutes.
   - Then activate the ACC timer system by pushing the knob all the way back toward the appliance to “HI” then pull forwards towards the front of the appliance until the knob stops.
   - At that point move the Burn Rate Air Control spring handle to 1/8”-1/2” from the low setting.
3. **Medium high burn setting:**
   - Burn Rate Air Control spring handle up to high position.
   - Then activate the ACC timer system by pushing the knob all the way back toward the appliance to “HI” then pull forwards towards the front of the appliance until the knob stops.
   - At that point move the Burn Rate Air Control spring handle to 1/2” – high.
4. **High burn setting:**
   - Burn Rate Air Control spring handle up to high position
   - Also activate ACC timer system knob pushed back to the “HI” position.

➔ **Surface Thermometer is a Valuable Guide to Operation**

A surface thermometer tells you when to adjust the air control, and when to refuel, Figure 10.1.

For example, when the thermometer registers at least 450°F (230°C) on the stove top after start-up you know the stove is hot enough and it may be time to adjust the air control if a sufficient ember bed has also been established. Note that the stove will warm up much sooner than the chimney, though; a warm chimney is the key to easy, effective stove operation. When thermometer readings drop below 350°F. (175°C) it’s time to adjust the air control for a higher burn rate or to reload the stove. A temperature reading over 650°F. (340°C) is a sign to reduce the air supply to slow the burn rate.

Use the following temperature ranges as a guide:

- Readings in the 350°-500°F. (175°-260°C) range indicate low to medium heat output.
- 500°-600°F. (260°-315°C) readings indicate medium heat output.
- Readings of 600°-650°F. (315-340°C) indicate high heat output. Operating your wood stove continuously at stove top temperatures higher than 650° F (340°C) may damage your wood stove.

NOTE: If using the optional blower, for burn rate settings 1-3, the blower shall be off for the first 30 minutes and then be operated in the high position at 30 minutes. For high burn setting, blower may continue to be on full after the loading of the fuel.

NOTE: The above information is provided as a guideline only. Altitude and other circumstances may require control adjustments to achieve the desired burn rates.

NOTE: Operate appliance on High Burn 45 minutes a day to help keep flue/chimney clean.

WARNING

Risk of Fire.
When set on High Burn Rate and over-riding the Automatic Combustion Control system an over fire situation can occur and may result in a chimney fire.
Over firing will void the appliance warranty.

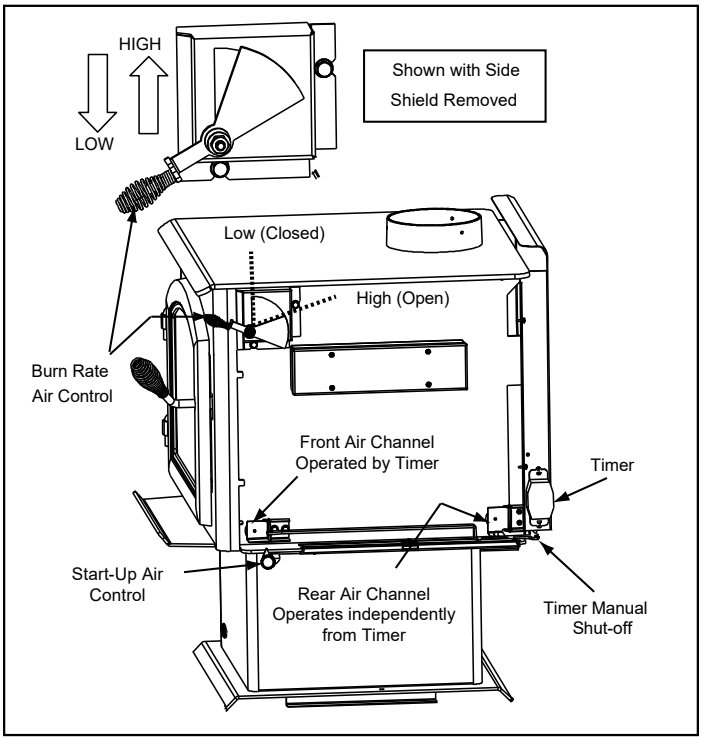

Figure 11.1

After activating the timer (ACC), if the control is placed within the rear air section on the label it will allow rear air to enter the firebox. This will not interfere with the timer gradually closing the front air channel in 25 minutes. If control is set on “HI” it over-rides the timer (ACC).

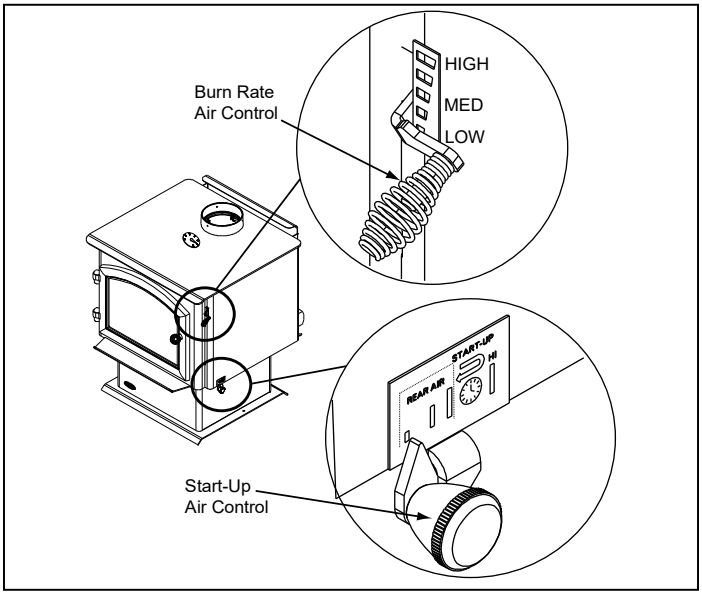

Figure 11.2

CAUTION

Injury Risk.
- Gloves recommended

Manual Timer Over-Ride: If you need to shut the ACC system off before it goes through the cycle of shutting itself off; 25 minutes, reach towards the back of the appliance on the right side and pull the lever towards the front of the appliance (**Figure 11.3).**

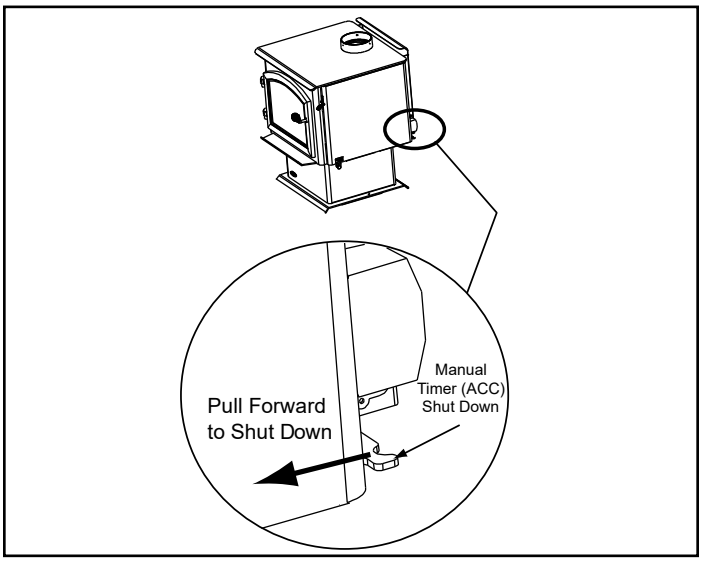

Figure 11.3

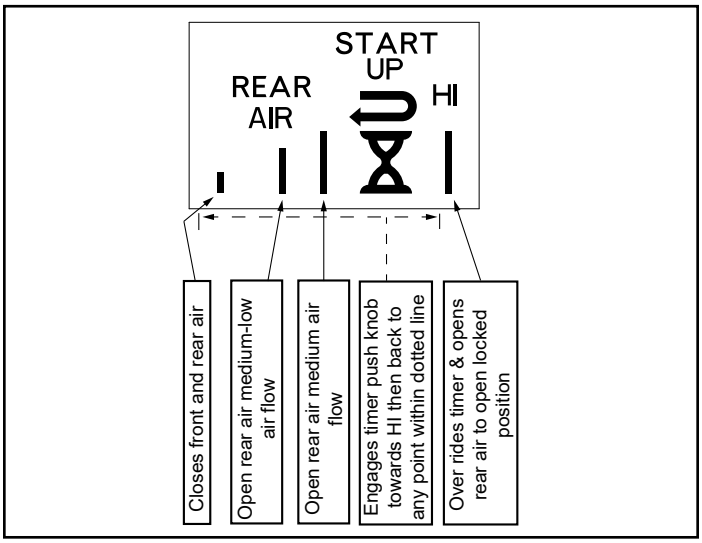

Figure 11.4

E. Building A Fire

Before lighting your first fire in the appliance:

NOTE: The special high temperature paint that your appliance is finished with will cure as your appliance heats. You will notice an odor and perhaps see some vapor rise from the appliance surface; this is normal. We recommend that you open a window until the odor dissipates and paint is cured.

1. Confirm the baffle is correctly positioned. It should be even with the front tube and resting on all tubes **(Figure 12.1 and Figure 12.2).**
2. Remove all labels from glass and inside of appliance.

There are many ways to build a fire. The basic principle is to light easily-ignitable tinder or paper, which ignites the fast burning kindling, which in turn ignites the slow-burning firewood. Here is one method that works well:

1. Open the Burn Rate Air and ACC Controls fully (Refer to the **Quick Start Guide** on page 6).
2. Place several wads of crushed paper on the firebox floor. Heating the flue with slightly crumpled newspaper before adding kindling keeps smoke to a minimum.
3. Lay small dry sticks of kindling on top of the paper.
4. Make sure that no matches or other combustibles are in the immediate area of the appliance. Be sure the room is adequately ventilated and the flue unobstructed.
5. Light the paper in the appliance. NEVER light or rekindle fire with kerosene, gasoline, or charcoal lighter fluid; the results can be fatal.
6. Once the kindling is burning quickly, add several full-length logs 3 inches (76mm) or 4 inches (102mm) in diameter. Be careful not to smother the fire. Stack the pieces of wood carefully; near enough to keep each other hot, but far enough away from each other to allow adequate air flow between them.
7. Set the Burn Rate Air Control and activate the ACC timer system.
8. When ready to reload, It is best to fully open both the Burn Rate Air and Start-up Air Controls ***before reloading***. This livens up the coal bed and reduces excessive emissions (opacity/smoke). Open door slowly so that ash or smoke does not exit appliance through opening. Large logs burn slowly, holding a fire longer. Small logs burn fast and hot, giving quick heat.
9. As long as there are hot coals, repeating steps 6 through 8 will maintain a continuous fire.

WARNING

Fire Risk.
- Do not leave the fire unattended when the door is unlatched or when using the fire screen.
- Unstable firewood could fall out of the firebox creating a fire hazard to your home.

NOTE:
- Build fire on brick firebox floor.
- Do NOT use grates, andirons or other methods to support fuel. It will adversely affect emissions.

WARNING

Fire Risk.

Do NOT store wood:
- Closer than required clearances to combustibles to appliance
- Within space required for loading or ash removal.

Do NOT operate appliance:
- With appliance door open.
- With ash removal system door open.

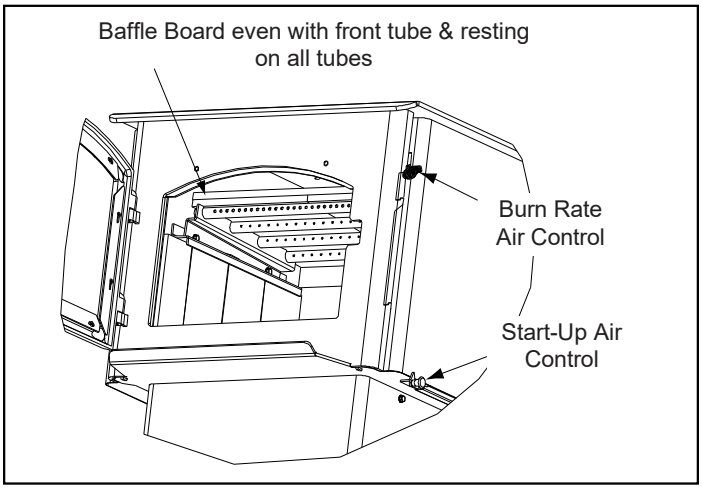

Figure 12.1

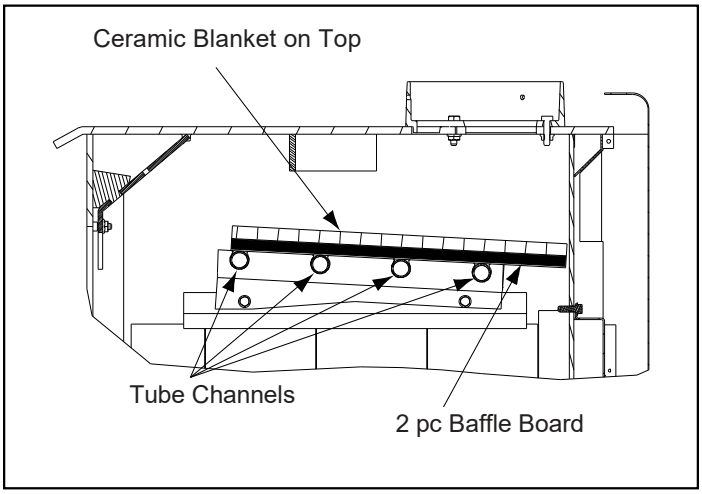

Figure 12.2

WARNING

Fire Risk.
- Do NOT burn wet or green wood.
- Store wood in dry location.
- Stack wood so both ends are exposed to air.

Wet, unseasoned wood can cause accumulation of creosote.

F. Blower Operating Instructions

NOTE: If your Quadra-Fire wood appliance is equipped with an optional blower, you should follow these guidelines:

1. **Initial (cold) start-up and all Burn Settings:** The blower can be plugged in and turned on right away. The blower fan is turned on and off by a snap disc. When your appliance has reached a certain temperature the blower will turn on and when your appliance has cooled down to a certain temperature it will turn off. Switch on blower control must be set to auto for this feature to work.
2. The blower is equipped with a speed control. Adjust the fan speed by turning the speed control clockwise to “Low” or counterclockwise to “High”.
3. **Snap Disc Location:** If you find the blower coming on and off at undesirable temperatures, relocate the snap disc to another location in the designated zone on the back of the appliance (**Figure 13.1).** There is a manual over-ride switch to deactivate the snap disc, if necessary **(Figure 13.2)**.

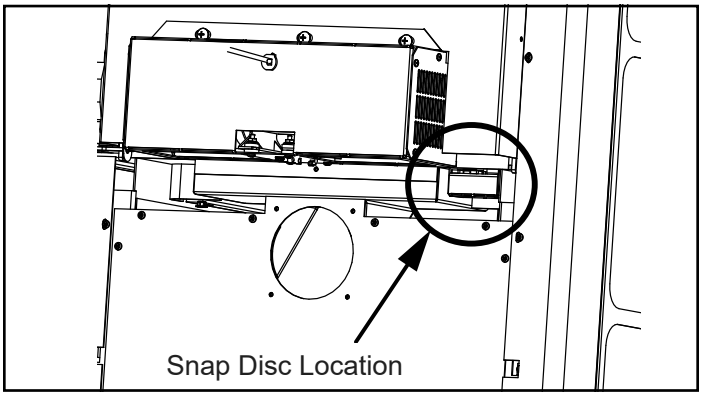

Figure 13.1

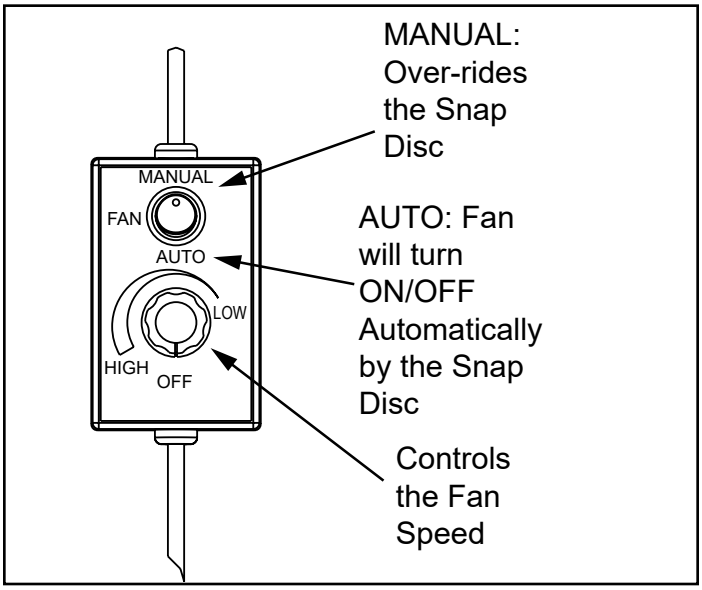

Figure 13.2

G. Opacity (Smoke)

This is the measure of how cleanly your appliance is burning. Opacity is measured in percent; 100% opacity is when an object is totally obscured by the smoke column from a chimney, and 0% opacity means that no smoke column can be seen. As you become familiar with your appliance, you should periodically check the opacity. This will allow you to know how to burn as nearly smoke-free as possible (goal of 0% opacity).

WARNING

Fire Risk.

- DO NOT BURN GARBAGE OR FLAMMABLE FLUIDS SUCH AS GASOLINE, NAPHTHA OR ENGINE OIL.
- Do NOT burn treated wood or wood with salt (driftwood).
- May generate carbon monoxide if burn material other than wood.

May result in illness or possible death.

WARNING

Fire Risk.

Keep combustible materials, gasoline and other flammable vapors and liquids clear of appliance.

- Do NOT store flammable materials in the appliance’s vicinity.
- DO NOT USE GASOLINE, LANTERN FUEL, KEROSENE, CHARCOAL LIGHTER FLUID OR SIMILAR LIQUIDS TO START OR “FRESHEN UP” A FIRE IN THIS Appliance.
- Keep all such liquids well away from the appliance while it is in use.
- Combustible materials may ignite.

CAUTION

When burning your first fire, you will experience smoke and odor from the appliance resulting from the curing of paint and burning off of any oils remaining from manufacturing.

OPEN WINDOWS DURING INITIAL BURN TO DISSIPATE SMOKE AND ODORS!

- Odors may be irritating to sensitive individuals.
- Smoke detectors may activate.

H. Clear Space

NOTE: Do NOT place combustible objects within 4 ft (1.2m) of the front of appliance **(Figure 14.1)**.

- **Mantel:** Avoid placing candles and other heat-sensitive objects on mantel or hearth. Heat may damage these objects.

WARNING

Do NOT place combustible objects in front of the appliance. High temperatures may ignite clothing, furniture or draperies.

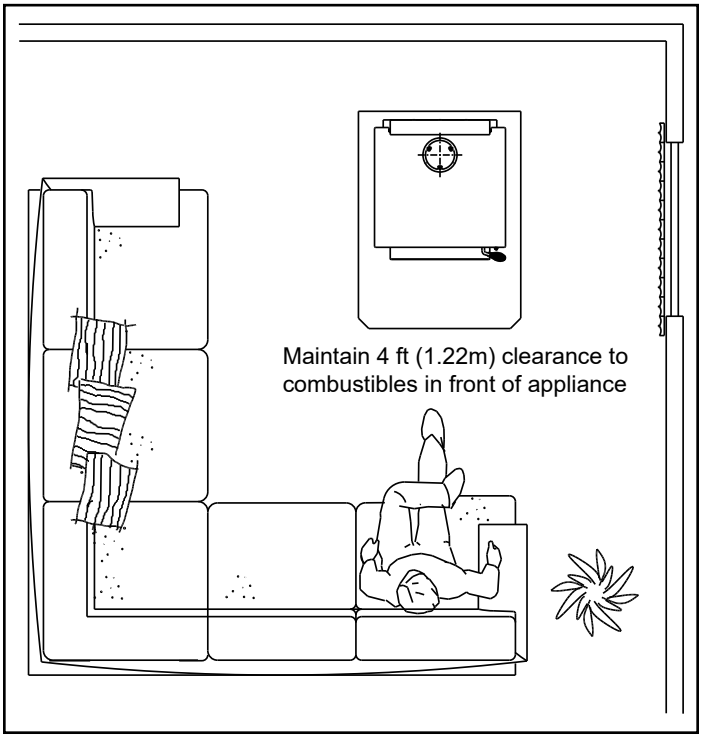

Figure 14.1

I. Negative Pressure

WARNING

Asphyxiation Risk.

- Negative pressure can cause spillage of combustion fumes, soot and carbon monoxide.
- Appliance needs to draft properly for safety.

Negative pressure results from the imbalance of air available for the appliance to operate properly. It can be strongest in lower levels of the house.

Causes include:

- Exhaust fans (kitchen, bath, etc.)
- Range hoods
- Combustion air requirements for furnaces, water appliances and other combustion appliances
- Clothes dryers
- Location of return-air vents to furnace or air conditioning
- Imbalances of the HVAC air handling system
- Upper level air leaks such as:
  - Recessed lighting
  - Attic hatch
  - Duct leaks

To minimize the effects of negative air pressure:

- Install the outside air kit with the intake facing prevailing winds during the heating season
- Ensure adequate outdoor air for all combustion appliances and exhaust equipment
- Ensure furnace and air conditioning return vents are not located in the immediate vicinity of the appliance
- Avoid installing the appliance near doors, walkways or small isolated spaces
- Recessed lighting should be a “sealed can” design
- Attic hatches weather stripped or sealed
- Attic mounted duct work and air handler joints and seams taped or sealed

J. Frequently Asked Questions

ISSUES	SOLUTIONS
Odor from appliance	When first operated, this appliance may release an odor for the first several hours. This is caused by the curing of the paint and the burning off of any oils remaining from manufacturing.
Metallic noise	Noise is caused by metal expanding and contracting as it heats up and cools down, similar to the sound produced by a furnace or heating duct. This noise does not affect the operation or longevity of the appliance.
Whirring sound	If the optional blower has been installed, the blower produces a whirring sound which increases in volume as the speed is increased.
CONTACT YOUR DEALER for additional information regarding operation and troubleshooting. Visit www.quadrafire.com to find a dealer.	

Table 15.1

WARNING

Fire Risk.

- DO NOT BURN GARBAGE OR FLAMMABLE FLUIDS SUCH AS GASOLINE, NAPHTHA OR ENGINE OIL.
- Do NOT burn treated wood or wood with salt (driftwood).
- May generate carbon monoxide if burn material other than wood.

May result in illness or possible death.

WARNING

Fire Risk.

Keep combustible materials, gasoline and other flammable vapors and liquids clear of appliance.

- Do NOT store flammable materials in the appliance's vicinity.

- DO NOT USE GASOLINE, LANTERN FUEL, KEROSENE, CHARCOAL LIGHTER FLUID OR SIMILAR LIQUIDS TO START OR "FRESHEN UP" A FIRE IN THIS APPLIANCE.
- Keep all such liquids well away from the appliance while it is in use.
- Combustible materials may ignite.

3 Maintenance and Service

A. Quick Reference Maintenance Guide

When properly maintained, your fireplace will give you many years of trouble-free service. Contact your dealer to answer questions regarding proper operation, troubleshooting and service for your appliance. Visit www.quadrafire.com/owner-resources to view basic troubleshooting, FAQs, use & care videos.

CAUTION

Allow the appliance to completely cool down before performing any cleaning or maintenance. Start the first inspection after the first 2 months of use, or if performance changes, and adjust your schedule accordingly. Maintenance is required for safe operation and must be performed to maintain your warranty.

	FREQUENCY	TASK
Baffle & Blanket 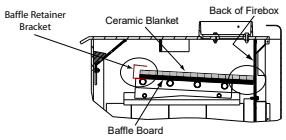	MONTHLY or after every one (1) cord of wood	Baffle and blanket placement is critical to heat output, efficiency and overall life of the appliance. Make sure the baffle is pushed all of the way to the back of the firebox and the blanket is laying flat. Inspect baffle for cracks.
Optional Blower 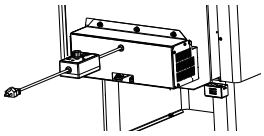	YEARLY or after every four (4) cords of wood	Vacuum the blower impellers.
Chimney System 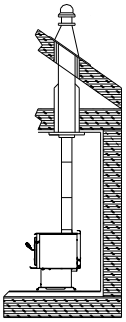	EVERY TWO MONTHS or after every four (4) cords of wood	The chimney and chimney cap must be inspected for soot and creosote every two months during the burn season or more frequency if chimney exceeds or is under 14-16 ft (4.3m-4.8m) measured from bottom of appliance. This will prevent pipe blockage, poor draft, and chimney fires. Always burn dry wood to help prevent cap blockage and creosote build-up.
Firebrick & Ash Removal 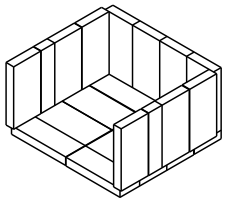	WEEKLY or after every 25 loads of wood	Ashes must be cool before you can dispose of the ashes in a non-combustible container. Firebrick is designed to protect your firebox. After ashes are removed, inspect the firebrick and replace firebricks that are crumbling, cracked or broken.
Door & Glass Assemblies 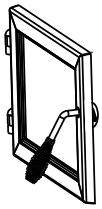	WEEKLY or after every 25 loads of wood	Keep door and glass gasket in good shape to maintain good burn. To test: place a dollar bill between the appliance and door and then shut the door. If you can pull the dollar out, remove one washer from door handle behind latch cam and try again. If you can still pull it out, replace the door gasket. Check the glass frame for loose screws to prevent air leakage. Check glass for cracks.
Door Handles 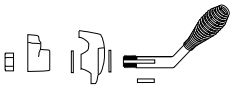	WEEKLY or after every 25 loads of wood	Check the door latch for proper adjustment. This is very important especially after the door rope has formed to the appliance face. Check door handle for smooth cam operation.

These are generic drawings and may not represent your model.

Table 16.1

B. General Maintenance

1. **Creosote (Chimney) Cleaning**

- **Frequency:** Every 2 months during heating season or as recommended by a certified chimney sweep; more frequently if chimney exceeds or is under 14-16 ft. (measured from bottom of appliance)
- **By:** Certified Chimney Sweep

Remove all ash from the firebox and extinguish all hot embers before disposal. Allow the appliance to cool completely. Disconnect flue pipe or remove baffle and ceramic blanket from appliance before cleaning chimney. Otherwise residue can pile up on top of the baffle and ceramic blanket and the appliance will not work properly. (See **Baffle Removal** on page 24). Close the door tightly. The creosote or soot should be removed with a brush specifically designed for the type of chimney in use. Clean out fallen ashes from the firebox.

It is also recommended that before each heating season the entire system be professionally inspected, cleaned and repaired if necessary.

Inspection: Inspect the system at the appliance connection and at the chimney top. Cooler surfaces tend to build creosote deposits quicker, so it is important to check the chimney from the top as well as from the bottom.

Formation and Need For Removal: When wood is burned slowly, it produces tar and other organic vapors which combine with expelled moisture to form creosote.

The creosote vapors condense in the relatively cool chimney flue of a newly-started or a slow-burning fire. As a result, creosote residue accumulates on the flue lining. When ignited, this creosote creates an extremely hot fire which may damage the chimney or even destroy the house.

The chimney connector and chimney should be inspected once every 2 months during the heating season to determine if a creosote or soot buildup has occurred. If creosote or soot has accumulated, it should be removed to reduce the risk of a chimney fire.

WARNING

Fire Risk.
Prevent creosote buildup.
- Inspect chimney connector and chimney once every two months during heating season.
- Remove creosote to reduce risk of chimney fire.
- Ignited creosote is extremely HOT.

WARNING

Fire Risk.
- Do not use chimney cleaners or flame colorants in your appliance. Will corrode chimney pipe.

2. **Disposal of Ashes**

- **Frequency:** When ash is within 1-3/4 in. (44mm) of firebox lip
- **By:** Homeowner

WARNING

Fire Risk.
Ashes could contain hot embers.

Ashes should be placed in a metal container with a tight fitting lid. The closed container of ashes should be placed on a non-combustible floor or on the ground, well away from all combustible materials, pending final disposal. If the ashes are disposed of by burial in soil or otherwise locally dispersed, they should be retained in the closed container until all cinders have thoroughly cooled.

WARNING

Fire Risk. Disposal of Ashes
- Ashes should be placed in metal container with tight fitting lid.
- Do not place metal container on combustible surface.
- Ashes should be retained in closed container until all cinders have thoroughly cooled.

3. **Appliance Inspection**

- **Frequency:** Every 2 months at the same time the chimney and chimney connector are inspected.
- **By:** Homeowner

Check for:

- Cracks in glass
- Door handle - smooth cam operation
- Baffle and ceramic blanket correct placement
- Baffle for warp-age
- Firebrick for cracks, broken or crumbly
- Door gasket (Dollar bill test): Place a dollar bill between the stove and the door and then shut the door. If you can pull the dollar bill out, replace the door gasket.
- Glass frame for loose screws

4. **Glass Cleaning**

- **Frequency:** As desired
- **By:** Homeowner

CAUTION

Handle glass assembly with care. Glass is breakable.
- Avoid striking, scratching or slamming glass
- Avoid abrasive cleaners
- Do not clean glass while it is hot

Clean glass with a non-abrasive glass cleaner. Abrasive cleaners may scratch and cause glass to crack. If the deposits on the glass are not very heavy, normal glass cleaners work well. Heavier deposits may be removed by using a damp cloth dipped in wood ashes or by using a commercially available oven cleaner.

After using an oven cleaner, it is advisable to remove any residue with a glass cleaner or soap and water. Oven cleaner left on during the next firing can permanently stain the glass and damage the finish on metal surfaces.

A portion of the combustion air entering the firebox is deflected down over the inside of the door glass. This air flow “washes” the glass, helping to keep smoke from adhering to its surface.

When operated at a low burn rate, less air will be flowing over the glass and the smokey, relatively cool condition of a low fire will cause the glass to become coated.

Operating the appliance with the Burn Rate Air Control and Start-Up Air Control all the way open for 30-45 minutes should remove the built up coating.

CAUTION

- Do not use polishes with abrasives. It will scratch surfaces.

5. **Cleaning Plated Surfaces**

- **Frequency:** Prior to first burn and then as desired
- **By:** Homeowner

Clean all the fingerprints and oils from plated surfaces **BEFORE** firing the appliance for the first time. If not cleaned properly before lighting your first fire, the oils can cause permanent markings on the plating.

After the plating is cured, the oils will not affect the finish and little maintenance is required. Wipe clean as needed.

CAUTION

- Do not use polishes with abrasives. It will scratch plated surfaces.

6. **Inspect Firebrick**

- **Frequency:** After each ash removal
- **By:** Homeowner

Replace the firebrick if they become crumbly and/or if there is a 1/4 inch (6.35mm) gap between the bricks.

The firebox is lined with firebrick, which has exceptional insulating properties. Do not use a grate; simply build a fire on the firebox floor. Do not operate appliance without firebrick.

1. After the coals have completely cooled, remove all old brick and ash from unit and vacuum firebox.
2. Remove new brick set from box and lay out to the diagram shown in the instructions that come with the brick set or refer to the diagram on the service parts list at the end of this manual.
3. Lay bottom bricks in unit.
4. Install rear bricks on the top of the bottom bricks. Slide top of bricks under clip on back of firebox wall and push bottom of bricks back.
5. Install side bricks. Slide top of brick under clips on side of firebox and push the bottom of the brick until it is flush with the side of the unit.

C. Correct Baffle & Blanket Placement

WARNING

Fire Risk.
Firebox damage due to improper baffle placement is not covered by warranty. Operate the wood burning appliance with the baffle in the correct position only.

Not doing so could result in:

- Reduced efficiency
- Overheating the chimney
- Overheating the rear of the firebox
- Poor performance

Ensure correct baffle placement and replace baffle components if damaged or missing.

CAUTION

The baffle boards are FRAGILE. Use extreme caution when loading firewood to prevent:

- Cracking, breaking or damaging the baffle boards

DO NOT operate the appliance without baffle boards

CORRECT POSITION

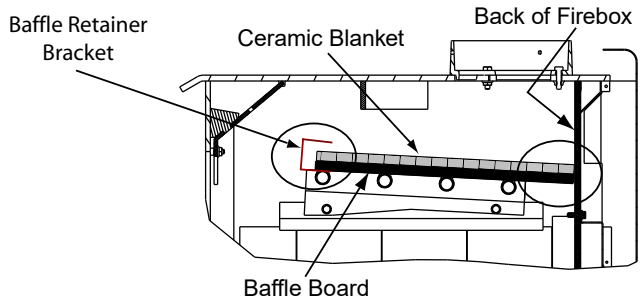

Ceramic Blanket and Baffle Board MUST be in contact with the back of the firebox and even with each other in the front.

Figure 19.1

INCORRECT POSITIONS

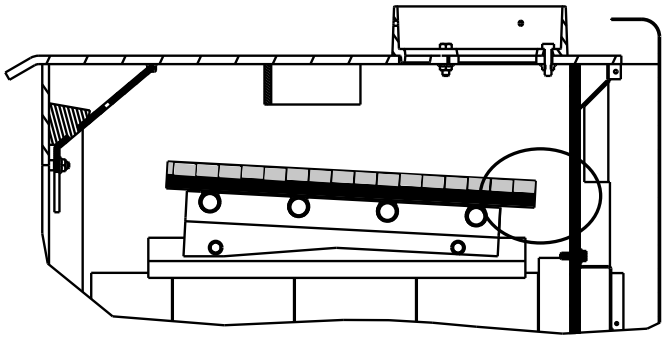

Ceramic Blanket and Baffle Board are NOT in contact with the back of the firebox.

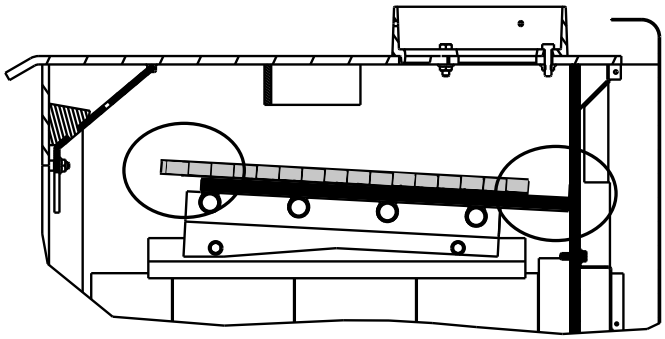

Ceramic Blanket is NOT in contact with the back of the firebox and NOT even with the Baffle Board in the front.

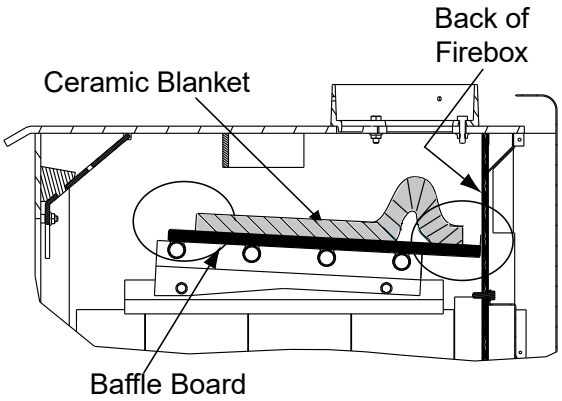

Ceramic Blanket is bunched up at the back of the firebox and NOT even with the Baffle Board in the front.

Figure 19.2

4 Troubleshooting Guide

With proper installation, operation, and maintenance your wood appliance will provide years of trouble-free service. If you do experience a problem, this troubleshooting guide will assist you or a qualified service person in the diagnosis of a problem and the corrective action to be taken.

Start Fire Problems	Possible Cause	Solution
Can not get fire started Excessive smoke or spillage Burns too slowly Not enough heat output	Not enough kindling/paper or no kindling/paper	Use dry kindling, more paper. Arrange kindling & wood for air movement.
	Not enough air for fire to ignite	Check for restricted termination cap
		Check for blockage of outside air kit (if installed).
		Check for flue blockage.
		Pre-warm flue before starting fire (refer to **Building a Fire** on page 13).
		Check for adequate vent height (refer to **Chimney Height / Rise and Run** on **page 13** of the Installation manual).
		Open window below the appliance towards the wind.
	Wood condition is too wet, too large	Use dry, seasoned wood (refer to **Wood Selection and Storage** on page 9).
	Bed of coals not established before adding wood	Start with paper & kindling to establish bed of coals (refer to **Building a Fire** on page 13).
	Flue blockage such as birds' nests or leaves in termination cap	Have chimney inspected for creosote and cleaned by a certified chimney sweep.
	Down draft or negative pressure Competition with exhaust devices	Do not use exhaust fans during start-up (refer to **Negative Pressure** on page 15).
		Open window below the appliance towards the wind.
Fire burns too fast	Extremely dry or soft wood	Mix in hardwood.
		Mix in less seasoned wood after fire is established (refer to **Wood Selection and Storage** on page 9).
	Over drafting	Check for correct vent height; too much vertical height creates over drafting.
		Check location of vent termination (refer to **Chimney Termination Requirements** on **page 12** of the Installation manual).

Table 20.1

5 Service Part Replacement

A. Glass

NOTE: Replace with 5mm ceramic glass only.

Service Part: 7000-012

1. Ensure that the fire is out and the appliance is cool to the touch.
2. Protect a table or counter top with padding or towels. Protect your hands and wear gloves to prevent injury.
3. Remove the door with the broken glass by lifting the door up and off of the hinges.
4. Lay door face down on a table or counter making sure the handle hangs over the edge so the door lays flat, on a soft surface.
5. Remove the screws from each glass retainer and remove the glass. (If screws are difficult to remove, soak with penetrating oil first).
6. Center the glass with edges evenly overlapping the opening in the door, (i.e. same space top and bottom, left and right sides).
7. Replace the glass retainers. Be careful not to cross thread the screws.
8. Tighten each retainer just a few turns until each is secured. Check again for centering of glass in door frame. Continue to tighten each retainer alternately, a few turns at a time, until the glass is secure.

NOTE: DO NOT OVER TIGHTEN RETAINERS - can cause glass to break.

9. Replace the door on the appliance.

Quadra-Fire appliances are equipped with ceramic super heat-resistant glass, which can only be broken by impact or misuse.

WARNING

Injury Risk.
- Use only glass specified in manual.
- DO NOT REPLACE with any other material.

CAUTION

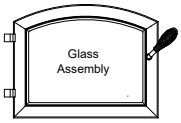

Handle glass assembly with care.
When cleaning glass:

- Avoid striking, scratching or slamming glass.
- Do NOT clean glass when hot.
- Do NOT use abrasive cleaners.
- Use a hard water deposit glass cleaner on white film.
- Use commercial oven cleaner on heavier deposits.
- Remove all residue of oven cleaner or will permanently stain glass on next firing.

Refer to maintenance instructions.

B. Firebrick

Service Part: SRV7033-006

Replace the firebrick if they become crumbly and/or if there is a 1/4 inch (6.35mm) gap between the bricks.

Inspect the firebrick after each ash removal.

The firebox is lined with high quality firebrick, which has exceptional insulating properties. There is no need to use a grate; simply build a fire on the firebox floor. Do not operate appliance without firebrick.

1. After the coals have completely cooled, remove all old brick and ash from appliance and vacuum firebox.
2. Remove new brick set from box and lay out to diagram shown.
3. Lay bottom bricks in appliance.
4. Install rear bricks on the top of the bottom bricks. Slide top of bricks under clip on back of firebox wall and push bottom of brick back.
5. Install side bricks. Slide top of brick under clips on side of firebox and push the bottom of the brick until it is flush with the side of the appliance.

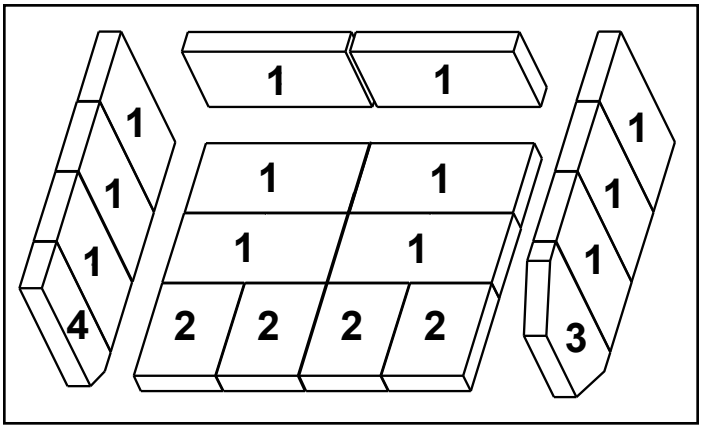

Figure 21.1

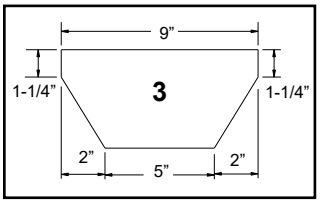

Figure 21.2

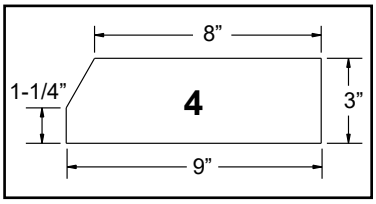

Figure 22.3

Placement	Dimensions	Qty Required
1	9” x 4.5” x 1.25”	12
2	6” x 4.5” x 1.25”	4
3	9” x 4.5” x 1.25” w/Angles	1
4	9” x 3” x 1.25” w/Angle	1

Table 21.1

C. Snap Disc

Service Part: SRV230-0470

1. Locate the snap disc bracket assembly at the bottom left rear corner of the appliance.
2. A magnet holds the bracket to the appliance. Pull the bracket down away from the appliance to expose the snap disc.
3. Pull the snap disc and spade connectors up and out of bracket as shown in **Figure 22.1**
4. Using a Phillips head screw driver, remove the 2 screws from the snap disc and then remove the snap disc from the spade connectors. Replace with new snap disc and re-connect to spade connectors.
5. Push the snap disc and spade connectors back inside bracket and re-attach the bracket to the appliance.

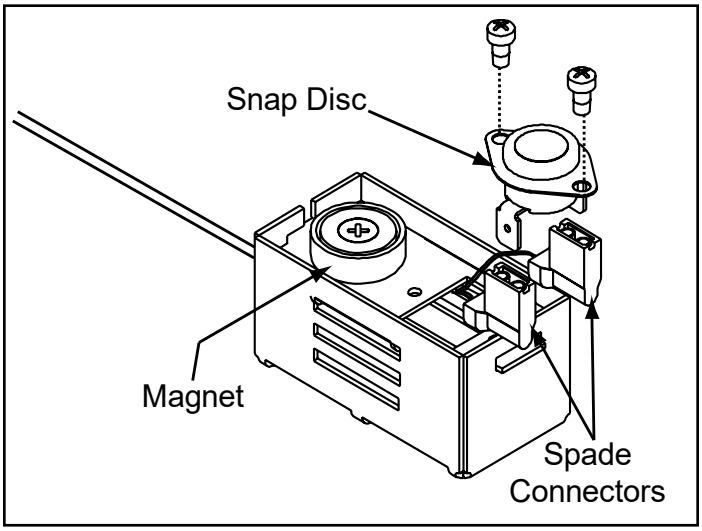

Figure 22.1

D. Door Handle Assembly

CAUTION

Do not over tighten lock nut. The door handle needs to move smoothly.

Service Part: 832-0540

1. Install washer on door handle shaft.
2. Slide door handle through door.
3. Install second washer(s) as shown in **Figure 22.2.**
4. Install key in groove.
5. Align groove in latch cam with key; slide latch cam over shaft
6. Install locknut but do not over tighten, the handle needs to move smoothly.
7. Install spring handle turning in a counter-clockwise motion to **required** 2 inch (51mm) clearance location on door handle rod (**Figure 22.2).**

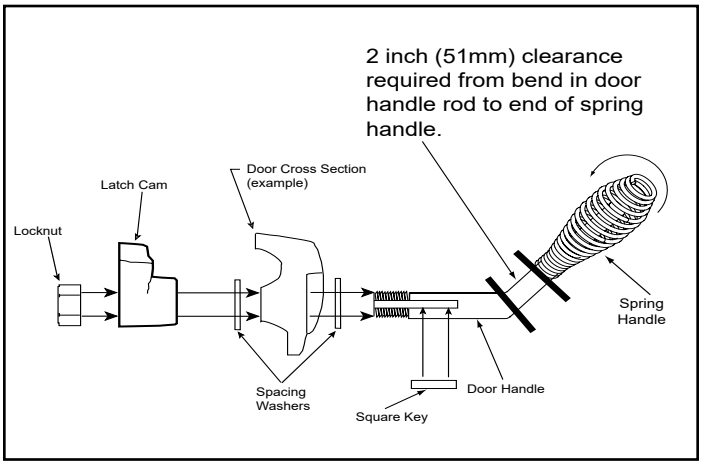

Figure 22.2

E. Baffle Removal

Service Part: SRV7033-209

1. Remove all ash from the firebox, and extinguish all hot embers before disposal into a metal container.
2. The baffle board has 2 pieces; with the ceramic blanket still in place, slide one baffle piece over the top of other one and pull out top piece through the door opening and then remove bottom baffle piece **(Figure 23.1)**.

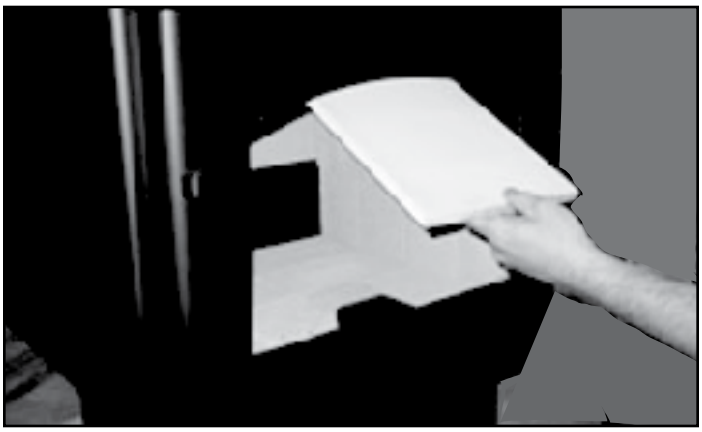

Figure 23.1 - Baffle

3. Remove the ceramic blanket **(Figure 24.2)**.

Figure 23.2 - Ceramic Blanket

4. Re-install the baffle pieces one piece at a time. Be sure the baffle boards are even with the front manifold tube and is resting on all tubes **(Figures 23.3, and Figure 23.4)**.

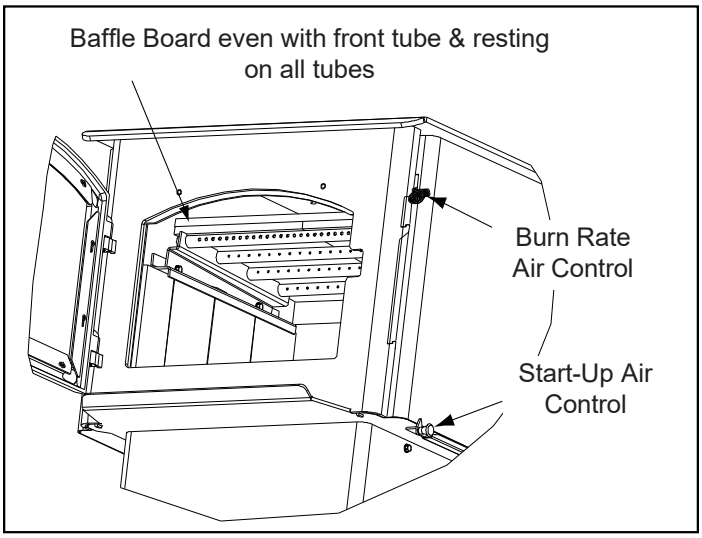

Figure 23.3

5. To re-install the ceramic blanket, it is easier to fold it in half first. Place on top of baffle board, open up and flatten and smooth out the blanket. Re-check the baffle board for correct positioning **(Figure 24.3)**.

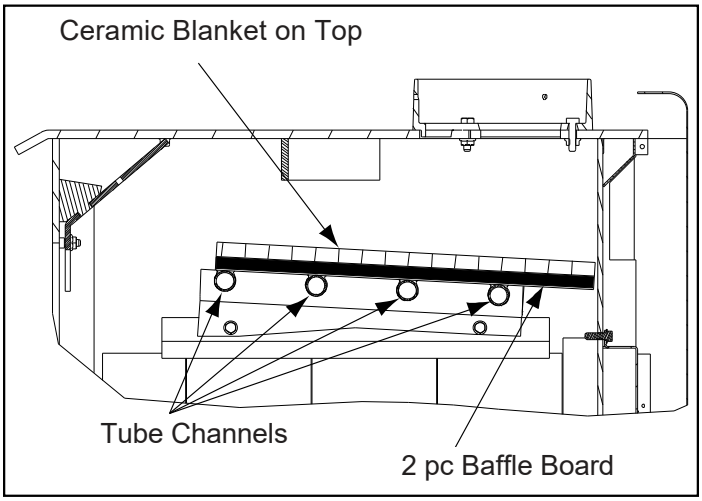

Figure 23.4

F. Tube Channel Assembly

Service Part: SRV7033-023

Removing Tube Channel Assembly

1. Remove the right side shield by removing 2 screws in the back using a Phillips head screw driver.
2. Remove 4 screws from channel access cover and remove cover.
3. Locate 2 channel nuts inside of chamber and remove using a 7/16 socket wrench. Slide out tube channel assembly.

NOTE: Soak the bolts with penetrating oil for at least 15 minutes before trying to remove them.

Replacing Tube Channel Assembly

1. Slide one gasket onto each tube.
2. Slide the tube channel assembly into side of firebox and insert each tube into the corresponding hole in the tube channel rack starting with the back hole first.
3. Make sure tube channel assembly is flush against the side of the appliance and secure with channel nuts.
4. Re-install channel cover and side shield.

NOTE: Service Space

In order to replace the tube channel assembly a clearance of 19 inches (483mm) is required on the right side of appliance in order to remove the tubes with the appliance in place.

If space is not available, the appliance will have to be disconnected from the chimney to proceed with the tube replacement.

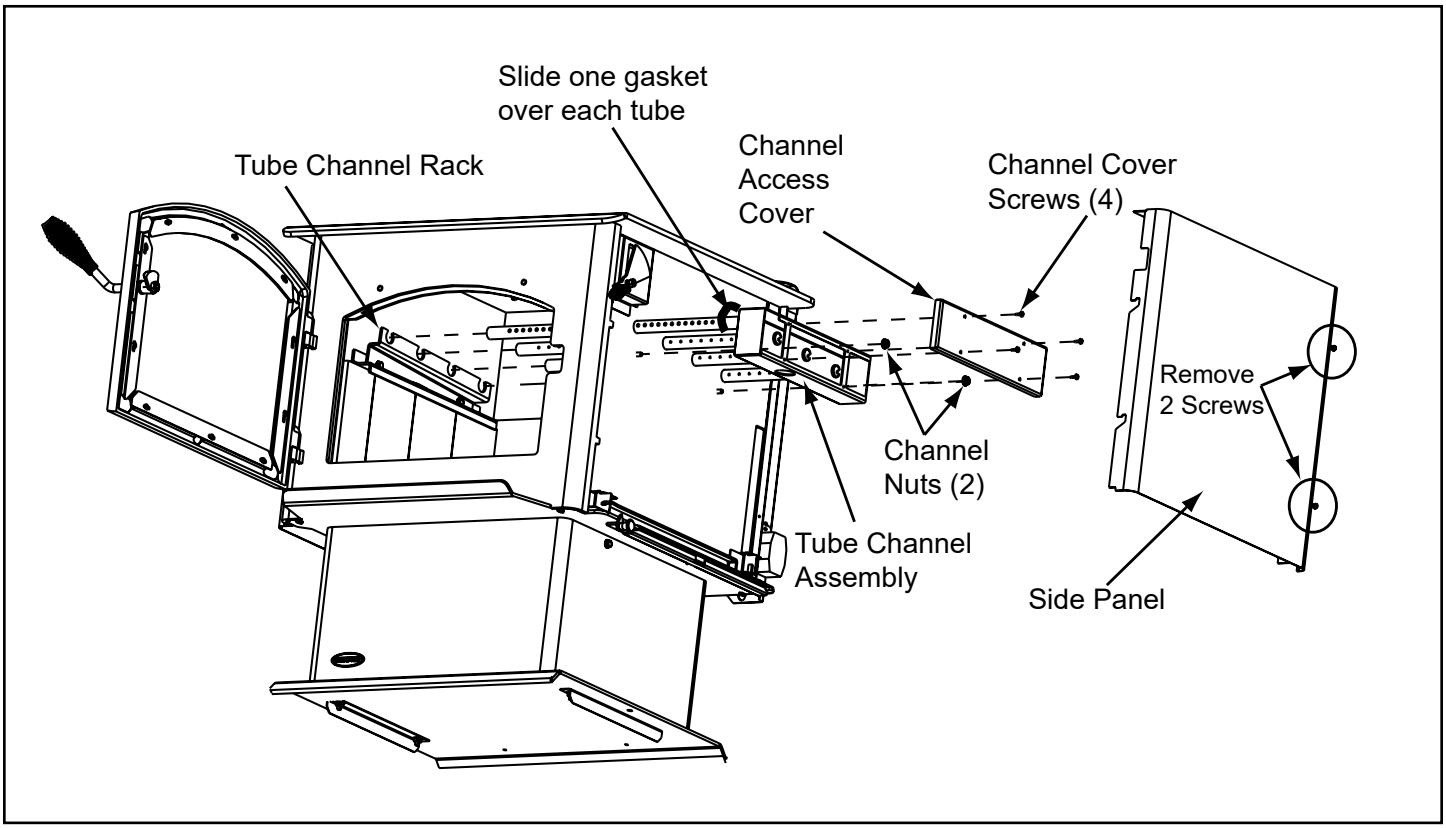

Figure 24.1

6 Reference Materials

A. Service and Maintenance Log

Date of Service	Performed By	Description of Service

Date of Service	Performed By	Description of Service

B. Service Part List

QUADRA-FIRE®

Service Parts

31M-ACC-C

Millennium - Wood Stove
Advanced Combustion Control (ACC)

Beginning Manufacturing Date: June 2017
Ending Manufacturing Date: Active

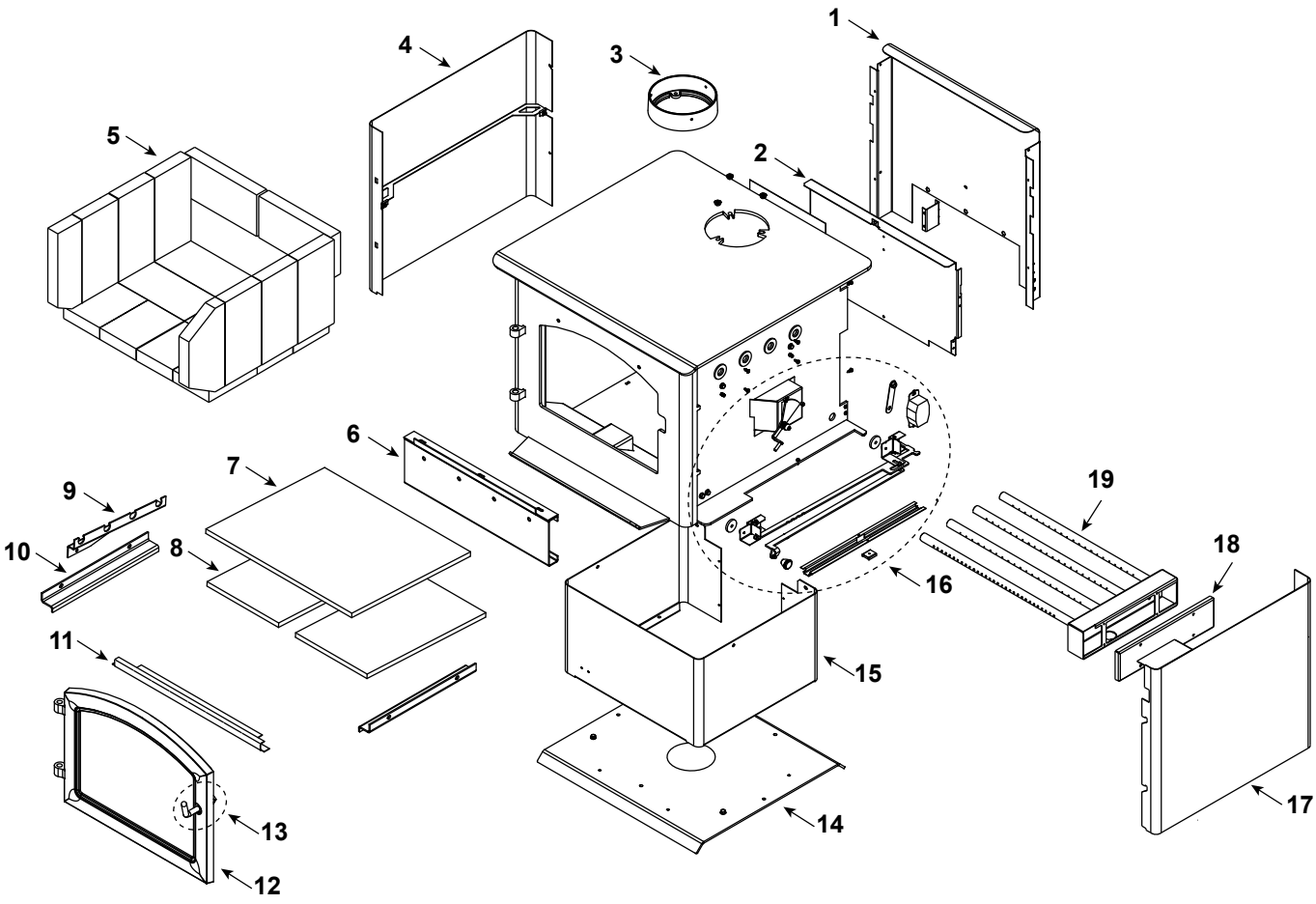

Part number list on following page.

07/21

Beginning Manufacturing Date: June 2017
Ending Manufacturing Date: Active

IMPORTANT: THIS IS DATED INFORMATION. Parts must be ordered from a dealer or distributor. **Hearth and Home Technologies does not sell directly to consumers**. Provide model number and serial number when requesting service parts from your dealer or distributor.

ITEM	DESCRIPTION	COMMENTS	PART NUMBER	Stocked at Depot
1	Air Channel, Convection w/Bracket (Retain Original SN Label)		SRV7033-144	
2	Air Supply Back		SRV7033-134	
3	Flue Collar		SRV7000-302	Y
4	Panel Assembly, Side, Left		SRV7033-019	

 # 5 Brick Set

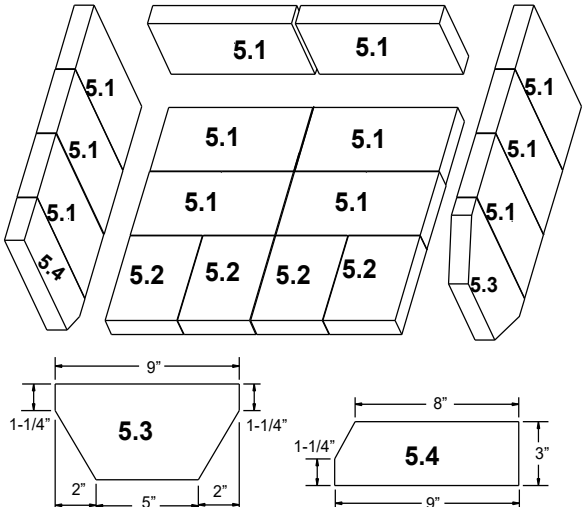

5	Brick Assembly - Complete Set	Pkg of 18	SRV7033-006	
5.1	Brick, 9 x 4-1/2 x 1-1/4" (Qty. 12 Req.)	Pkg of 1	832-0550	
		Pkg of 6	832-3040	
5.2	Brick, 6 x 4-1/2 x 1-1/4"	Qty. 4 Req.	SRV7128-002	
5.3	Brick, 9 x 4-1/2 x 1-1/4" w/angles, see diagram	Qty. 1 Req.	SRV7128-805	
5.4	Brick, 9 x 3 x 1-1/4" w/angle, see diagram	Qty. 1 Req.	SRV7128-617	
6	Rear Channel Assembly		SRV7033-002	Y
7	Ceramic Fiber Blanket, 1/2" Thick (19" W x 13-3/4" H)		832-3390	Y
8	Baffle Board - 9-1/2 in W x 13-3/4 in H	Pkg of 2	SRV7033-209	Y
9	Tube Support Rack		SRV7033-148	
10	Brick Retainer		SRV7033-149	

#11 Baffle Protection Channel

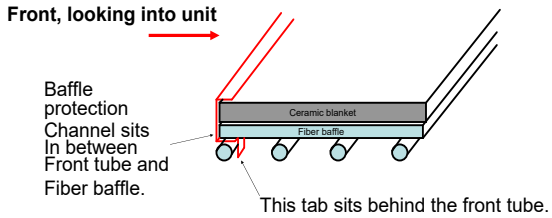

11	Baffle Protection channel		SRV7033-298	

Additional service part numbers appear on following page.

Beginning Manufacturing Date: June 2017
Ending Manufacturing Date: Active

#12 Door Assembly

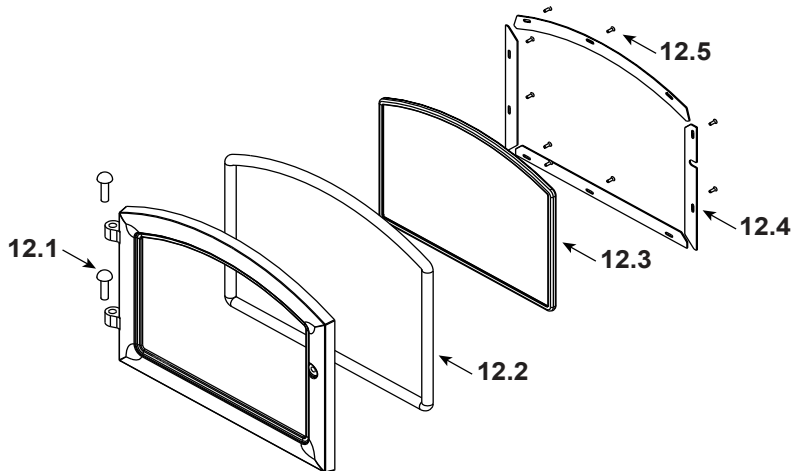

#13 Handle Assembly

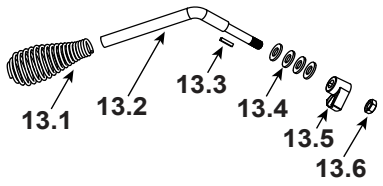

IMPORTANT: THIS IS DATED INFORMATION. Parts must be ordered from a dealer or distributor. **Hearth and Home Technologies does not sell directly to consumers**. Provide model number and serial number when requesting service parts from your dealer or distributor.

ITEM	DESCRIPTION	COMMENTS	PART NUMBER	Stocked at Depot
12	Door Assembly	Black	DR-31/43BK-FH	Y
		Nickel	DR-31/43NL-FH	Y
12.1	Hinge Pins, 1/2”	Black	7000-606/2	Y
		Nickel	SRV430-5320	
12.2	Rope, Door, 3/4” x 84” - Field cut to Size	7 Ft Length	832-1680	Y
12.3	Door Glass Assembly - 15-1/2” W x 13-3/8” H		SRV7000-012	Y
	Gasket, Glass Tape - Field cut to Size	5 Ft Length	832-0460	Y
12.4	Glass Frame Set		832-0350	
12.5	Screw, Flat Head Philips 8-32 x 1/2	Pkg of 12	220-0490/12	Y
13	Door Handle Assembly		832-0540	
13.1	Handle, Spring	Black	SRV7000-613	Y
		Nickel	250-8330	Y
13.2	Door Handle, Formed		SRV430-1131	Y
13.3	Key, Cam Latch		SRV430-1151	
13.4	Washer, SAE, 3/8	Pkg of 3	832-0990	Y
13.5	Cam Latch		SRV430-1141	
13.6	Nut, Locking Door Handle	Pkg of 24	226-0100/24	Y
	Component Pack: (Spring Handles(1) 1/2” & (2) 1/4”, 2 Hinge Pins, & Quadra-Fire Logo)	Nickel	436-5360	

Additional service part numbers appear on following page.

Beginning Manufacturing Date: June 2017
Ending Manufacturing Date: Active

IMPORTANT: THIS IS DATED INFORMATION. Parts must be ordered from a dealer or distributor. **Hearth and Home Technologies does not sell directly to consumers**. Provide model number and serial number when requesting service parts from your dealer or distributor.

ITEM	DESCRIPTION	COMMENTS	PART NUMBER	Stocked at Depot
14	Pedestal Riser		SRV7033-207	
15	Pedestal Base		SRV7033-163	
	Logo, Quad Black	Pkg of 10	7000-649/10	

#16 Burn Rate Controls & Accociated Parts

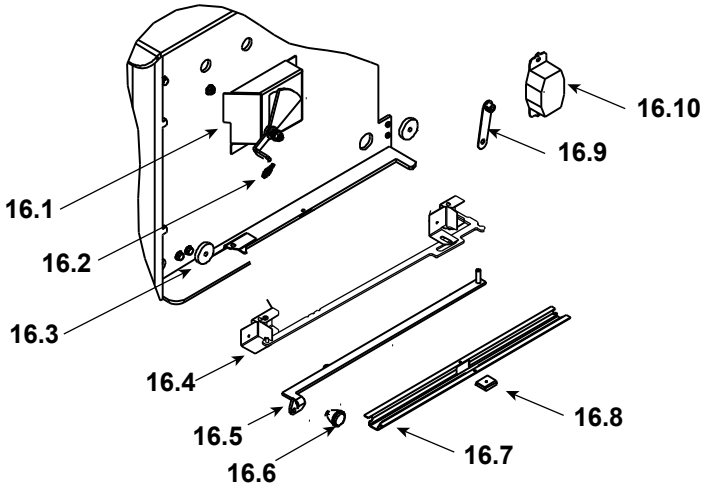

16.1	Burn Rate Control Assembly		SRV7033-033	Y
16.2	Spring Handle, 1/4”, Black		SRV7000-614	Y
16.3	Door Gasket - Front & Rear Air Timer Doors		7033-282	Y
16.4	Timer Air Control Assembly		SRV7033-052	Y
	Rear Air Door Assembly		SRV7033-024	Y
16.5	Rear Air Control Arm Assembly		SRV7033-035	Y
16.6	Start-Up Control Knob		SRV7000-343	
16.7	Air Control Rod Guide		SRV7033-210	
16.8	Latch, Magnet	For Air Control	SRV229-0631	
16.9	Timer Arm Assembly		SRV7033-034	Y
16.10	Timer (Only) Replacement Assembly		SRV480-1940	Y
17	Panel Assembly, Side, Right		SRV7033-017	
18	Tube Channel Top - Tube Channel Access Cover		SRV7033-237	
19	Tube, Channel Assembly	Manifold Tubes	SRV7033-023	Y
	Gasket, Manifold	Pkg of 4	7038-168/4	Y
	Component Pack (Includes Touch-Up Paint, Spring Handles (1) 1/2” and (2) 1/4”, Trimount Plug, Owners Manual and Warranty Card).	Black & Gold Trim	SRV7033-075	
	Paint Touch-Up		3-42-19905	
	Plug, Trimount, .250”	Pkg of 24	229-0880/24	Y

Additional service part numbers appear on following page.

Beginning Manufacturing Date: June 2017
Ending Manufacturing Date: Active

IMPORTANT: THIS IS DATED INFORMATION. Parts must be ordered from a dealer or distributor. **Hearth and Home Technologies does not sell directly to consumers**. Provide model number and serial number when requesting service parts from your dealer or distributor.

ITEM	DESCRIPTION	COMMENTS	PART NUMBER	Stocked at Depot
	ACCESSORIES			
	Blower Assembly		BK-ACC	
	Blower, Convection - Replacement Blower		812-4900	Y
	Blower Control Box w/Switch		SRV7000-194	Y
	Component Pack		7033-051	
	Snap Disc Bracket Assembly		SRV7033-036	
	Snap Disc, # 1, Convection Blower		SRV230-0470	Y
	Wire Harness, Blower		7033-262	
	Outside Air Kit, Floor & Rear		OAK-ACC	
	Outside Air Collar Assembly		SRV7033-039	
	Outside Air Shield		SRV33271	Y
	Outside Air Cover Plate Assembly		SRV7033-041	Y
	Upgrade, Door, Nickel		UK-DRNL	
	FASTENERS			
	Avk Rivnut Repair Kit - 1/4-20 & 3/8-16 Rivnut Tools		RIVNUT-REPAIR	Y
	Bolt, Hex Head, 1/4-20 x 1	Pkg of 10	25221A/10	Y
	Button Head 1/4-20 x .5	Pkg of 20	32328/20	Y
	Nut, Keps Lock, 10-32	Pkg of 40	226-0050/40	Y
	Nut, Keps Lock, 8-32	Pkg of 40	226-0060/40	Y
	Nut, Ser Flange Small 1/4-20	Pkg of 24	226-0130/24	Y
	Screw, Sheet Metal #8 x 1/2 S-Grip	Pkg of 40	12460/40	Y
	Washer, 1/4 Sae	Pkg of 24	28758/24	Y

QUADRA-FIRE®

NOTHING BURNS LIKE A QUAD

CONTACT INFORMATION

Hearth & Home Technologies
352 Mountain House Road
Halifax, PA 17032
Division of HNI INDUSTRIES

Please contact your Quadra-Fire dealer with any questions or concerns.
For the number of your nearest Quadra-Fire dealer
log onto www.quadrafire.com

CAUTION

DO NOT DISCARD THIS MANUAL

- Important operating and maintenance instructions included.
- Read, understand and follow these instructions for safe installation and operation.
- Leave this manual with party responsible for use and operation of this appliance.

We recommend that you record the following pertinent information for your heating appliance.

Date purchased/installed: _____

Serial Number: _____ Location on appliance: _____

Dealership purchased from: _____ Dealer Phone: 1( ) -

Notes: _____

_____

_____

_____

This product may be covered by one or more of the following patents: (United States) 5341794, 5263471, 6688302, 7216645, 7047962 or other U.S. and foreign patents pending.

HEARTH & HOME technologies™